RH
RESTORATION HARDWARE

CUSTOM DRAPERY + CUSTOM WINDOW HARDWARE PROGRAMS

GETTING STARTED:

From the fabric you select to the hardware you choose, window treatments are an opportunity to define a room's style. This guide outlines the various custom drapery styles and window accessories we offer, and provides easy-to-follow instructions on how to measure for each.

TOOLS YOU WILL NEED:

- Drill with a ⅛" bit and a Phillips bit
- Phillips screwdriver
- Metal tape measure

Please Note: Brackets must be securely attached to the mounting surface. If your screws cannot attach to wood studs, please use a different fastener, which can be found at any hardware store.

1. CHOOSING YOUR CUSTOM DRAPERY STYLE:

Our drapery is tailored from the finest fabrics, and available in your choice of 7 styles: Rod Pocket, 2-Fold and 3-Fold French Pleat, 2-Fold and 3-Fold Tailored Pleat, Grommet or Ripple Fold.

A-C. ROD POCKET

- Offers casual simplicity.
- Features a fabric casing along the top that can be slipped over a rod when using the drapery without hooks or rings (C); can also be used with drapery rings (A & B).
- For ease of opening and closing, use a drapery rod and rings (A & B).
- We recommend using 7 drapery rings to hang each 60 inches of rod pocket panel.
- Clip rings can be used with lighter-weight rod pocket drapery (A). For heavier, lined drapery, choose drapery hooks and loop rings (B).

D. FRENCH PLEAT

- Also referred to as "pinch pleat," this is our most traditional style.
- The pleats are stiffened with buckram, providing a clean, crisp and classic aesthetic.
- Available in 2-fold and 3-fold pleat styles.
- We recommend using 7 drapery loop rings to hang each 60 inches of French pleat panel.
- Drapery hooks are pre-installed for convenience.

E. TAILORED PLEAT

- A traditional and clean style that offers tailored fullness.
- Sleek waterfall pleats let fabric drape smoothly.
- The pleats are stiffened with buckram, providing a clean, crisp and classic aesthetic.
- Available in 2-fold and 3-fold pleat styles.
- We recommend using 7 drapery loop rings to hang each 60 inches of tailored pleat panel.
- Drapery hooks are pre-installed for convenience.

F. GROMMET

- Our most casual option, with metal eyelets (grommets) applied to the top of each panel.
- Drapery rings are not needed as the grommets are designed to move smoothly along the drapery rod.
- Available in 4 grommet finish options: Satin Nickel, Chrome, Polished Brass and Black.

G. RIPPLE FOLD

- A more modern option that offers clean lines and functionality.
- Soft folds of fabric glide easily along a track, creating a look that's simple and elegant.
- Custom track can be mounted to wall or ceiling.
- Cord or baton control.
- All necessary hardware is included.
- See special instructions beginning on page 6 for measuring and installation of custom Ripple Fold drapery.

A. ROD POCKET WITH CLIP RINGS

B. ROD POCKET WITH LOOP RINGS

C. ROD POCKET

D. FRENCH PLEAT

E. TAILORED PLEAT

F. GROMMET

G. RIPPLE FOLD

RH
RESTORATION HARDWARE

CUSTOM DRAPERY + CUSTOM WINDOW HARDWARE PROGRAMS *(continued)*

2. CHOOSING YOUR LINING STYLE

Lining refers to the fabric sewn to the back of your drapery. Depending on your choice, benefits may include added sun protection, improved insulation or increased light control. Choose from four styles: Unlined, Privacy, Blackout or Privacy with Interlining.

UNLINED
- No lining added to your window treatment.
- Preserves the natural transparency of the material.
- Rings, strings and mechanisms may be visible through sheers.

PRIVACY
- Provides privacy and greater light control.
- Adds body and weight, and protects the material from fading.
- Rings, strings and mechanisms may be visible through sheers.

BLACKOUT
- Blocks 99% of light for complete privacy and insulation.
- Adds body and weight, and protects the material from fading.
- Ideal for rooms where light blockage is desired.

PRIVACY WITH INTERLINING
- Standard privacy lining provides privacy and greater light control.
- Cotton flannel interlining between privacy lining and the drapery protects material and provides insulation.
- Offers additional body and fullness.

3. CUSTOM WINDOW HARDWARE

Our Custom Window Hardware program offers a one-stop total solution to your drapery hardware needs. Based on your drapery measurement and style selections, we will custom-size the appropriate rods and brackets for each window, and offer you a choice of hardware finishes, finials and bracket type from our Estate Collection. If you select drapery rings, your custom hardware will include the appropriate number of rings for the drapery you have chosen.

CUSTOM DRAPERY RODS, FINIALS & ACCESSORIES

Our Estate drapery rods are available in large and small diameters, and can be paired with your choice of 9 sophisticated finials and accompanying hardware.

A. DRAPERY RODS
- Available in custom lengths from 12" to 180" (15').
- Rods over 60" are composed of two equal-length rods cut to size; rods over 120" are composed of three rods of equal size. Connector screws are included.

B. FINIALS
- Purely decorative; can create a bold or subtle statement.
- Select a finial that accentuates an architectural element or accessory in the room, or minimize the size of the finial to complement the scale of a smaller room.
- For a subtle look, we offer end-cap finials.

C. BRACKETS
- End brackets are needed at each end to support the drapery rod.
- The longer the rod, the more brackets are needed; your custom drapery selection will include end brackets as well as the appropriate number of center brackets for support.
- Available in your choice of Round or Rectangular shape.

D. DOUBLE RODS
- Double Rods are used to layer drapery. Selecting double rods allows you to hang sheer panels behind heavier ones to regulate light, noise, drafts and privacy.

E. DRAPERY RINGS
- If you select drapery rings, your custom hardware total solution set will include 7 rings per 60" width.
- Available in 2 styles: Clip or Loop.
- Clip Rings: For hanging sheer and lighter-weight rod-pocket drapery. Creates attractive folds in the fabric and provides a space between the rod and the panel.
- Loop Rings: Use with our lined rod-pocket and pleated drapery. Requires the use of drapery hooks, which are pre-installed only with pleated drapery.

CUSTOM DRAPERY + CUSTOM WINDOW HARDWARE PROGRAMS *(continued)*

F. DRAPERY WAND
- Used to help move the drapery smoothly across the rod.
- Can be connected to a loop ring.
- Sold separately.

G. TIEBACKS
- Used to pull fabric away from the window in a stylish drape.
- Available in styles to coordinate with our finials.
- Sold separately.

4. MEASURING FOR CUSTOM DRAPERY AND CUSTOM WINDOW HARDWARE

Before measuring, consider the look you'd like to achieve – formal or casual – then follow the steps below.

DETERMINE THE RIGHT LENGTH FOR THE LOOK YOU WANT

Our drapery length reflects the full length of fabric, from the top edge to the bottom hem.
- For grommet top, measure from the point where you want the top of the drapery to be.
- Drapery rods are typically installed 4" above the window frame (see above center) or closer to the ceiling (see above left); the latter gives the illusion of a higher ceiling.
- For a tailored, more casual look: Measure the distance from the bottom of the installed drapery rod or drapery rings, to the floor. Subtract 1/2" to get the panel length you need (see above left).
- For longer, more formal drapes that puddle on the floor in luxurious folds: Add 1"-10" to the height measurement.
- There are different degrees of puddling:
  - 1" Puddle: Also called a "break" or "trouser break." A clean look, with drapery just touching on the floor (see "Tailored" above).
  - 2-4" Puddle: A standard puddle, with just a slight spill of fabric (see "Standard" above).
  - 5-8" Puddle: A true puddle with enough extra length to fan the fabric out onto the floor (see "Full" above).
  - 10"+ Puddle: Appropriate for heavy material and very lush decors.
- Puddling is not recommended for drapery that will be opened and closed regularly, as the bottoms will get dirty very quickly.

RH
RESTORATION HARDWARE

CUSTOM DRAPERY + CUSTOM WINDOW HARDWARE PROGRAMS *(continued)*

MEASURING TIPS

- We offer a professional measure-and-install service. Please contact us at 800.762.1005 or by email at customwindows@rh.com for details.
- Custom drapery is available in any size up to 29 1/2' wide in 1/4" increments and 15' long in 1" increments.
- Precise measurements are key.
- Use a steel tape measure, measuring to the nearest 1/4" in width and to the nearest 1" in length.
- Measure each window and doorway individually (note: windows and doors that appear to be the same size often are not).
- Instructions are provided with all of our window hardware for installation on most surfaces.
- Ripple Fold drapery includes a custom track that may be wall- or ceiling-mounted, and a choice of cord or baton controls. Please see **Measuring for Ripple Fold Drapery** on page 6.

1. DETERMINE DRAPERY ROD WIDTH

- Measure the width of your window, taking into account whether you'd like a trim-mounted (i.e., rod placed directly on window trim) or wall-mounted rod (A).
- If your drapery will open and close, allow 3"-12" on either side of the window frame for the panels to rest when they are open.
- Your custom drapery will be made to the width you specify. There is no need to add width to achieve a classic, luxurious look, as all of our custom drapery styles are designed with fullness built in:
- Rod Pocket, Grommet and Ripple Fold style drapery panels are constructed with fabric 1.8 times the width of the window they will cover.
- French Pleat and Tailored Pleat style drapery panels use 2.5 times as much fabric as each panel's fully extended width for extra depth.
- Consider the extra wall space needed for decorative finials.

2. DECIDE WHETHER OR NOT TO USE DRAPERY RINGS

- Drapery that is hung from rings (B) requires the drapery rods to be installed at a height greater than the length of the drapery.

3. DETERMINE ROD PLACEMENT

- Drapery rings (B) are recommended for ease of opening and closing drapery panels.
- Note that drapery rings add a few extra inches to your rod placement.
- To determine proper rod height if using drapery rings: With the drapery attached to the rings, measure the distance from bottom of rod to top of drapery fabric; add this measurement to the drapery length.
- To determine proper rod height if not using drapery rings: Simply measure the distance from bottom of rod to floor, and install the rod at that height.
- For low light-filtration, mount the rod 6" above the trim and allow the rod width to extend at least 3" beyond either side of the window frame.
- To add visual height to a room, mount the rod closer to the ceiling. When hanging Rod Pocket drapery, there is some rod "take-up" when the material is gathered onto the pole. Typically, you will need to install smaller rods 1" lower than the finished length, while rods with a diameter of 2" or more will need to be installed approximately 2" lower.
- For a layered look, order the double rod option (C).

4. DETERMINE BRACKET PLACEMENT

- Install brackets a maximum of 60" apart to provide the drapery rod with maximum support. A center bracket (D) is needed for longer rods.
- A connection seam requires a center bracket. The appropriate number of center brackets are included with your Custom Hardware order. For any rod over 60", two equal-length rods will connect to achieve the total length (1 center bracket); for rods over 120", three equal rods will connect (2 brackets).
- When you order our Custom Hardware total solution sets, all necessary parts are included.

A. WALL-MOUNTED ROD
B. DRAPERY RINGS

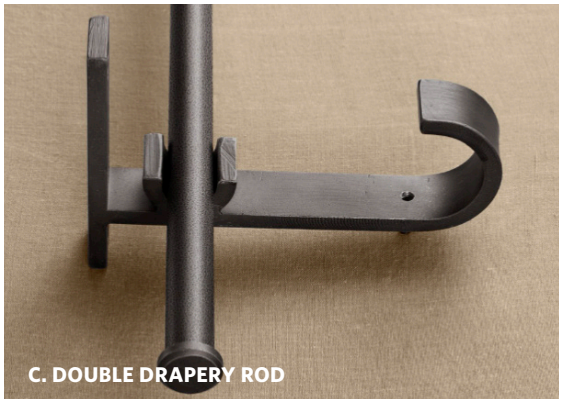

C. DOUBLE DRAPERY ROD

D. RODS AND BRACKET

CUSTOM DRAPERY + CUSTOM WINDOW HARDWARE PROGRAMS *(continued)*

5. WINDOW HARDWARE MEASUREMENT WORKSHEET

Use the following diagram to jot down measurements:

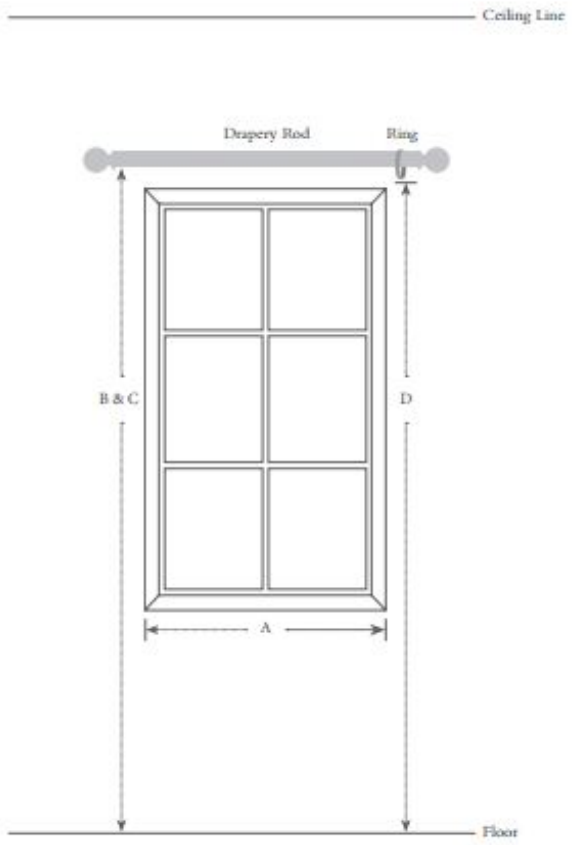

1. DETERMINE SPACE NEEDED FOR DRAPERY ROD
- Measure outside window frame to outside frame (see A).
- Add 3"-12" for panels to rest on either side of window frame when open.
- Add the extra inches needed for decorative finials.
- The total from the 3 measurements above is the amount of horizontal space needed for your drapery rod.

2. DETERMINE ROD PLACEMENT
- If not using drapery rings: Measure from bottom of rod to floor (see B).
- If using drapery rings: With the drapery attached to the rings, measure the distance from bottom of rod to top of drapery fabric; add this measurement to the drapery length to determine rod placement.

3. DETERMINE DRAPERY LENGTH
- If not using drapery rings: Measure from bottom of rod to top of floor or top of window sill, depending on desired window coverage (C).
- If using drapery rings: With rings attached to rod, measure from bottom of rings to top of floor or top of window sill, depending on desired window coverage (D).
- If you want drapery to "puddle" on the floor (see page 3 for details): Decide the amount of puddling desired, and add that measurement to your panel length. This is the overall panel length needed.

4. DETERMINE DRAPERY WIDTH
- Measure overall window width (see A).
- Add 2" to 8" to reduce light gaps as desired.
- Our custom drapery styles are designed with fullness built in; there is no need to add width to create fullness.

6. MEASURING FOR RIPPLE FOLD DRAPERY

MEASURING TIPS

- Precise measurements are key.
- Use a steel tape measure, measuring to the nearest 1/4".
- Measure each window and doorway individually (note: windows and doors that appear to be the same size often are not).
- Ripple Fold drapery hangs 1 1/4" below the top of the track. Please take this into consideration when figuring drapery length, as you will need to deduct 1 1/4" from your "top of track to floor measurement" to accommodate. Drapery panels will be made to the exact length you specify.

SELECT CONTROL TYPE (CORD OR BATON)

CORD

- Open and close panels by pulling on a cord.
- Comes with pulley that can be secured to wall.
- Cord length is predetermined, at 3/4 of the length of the drapery.
- Available for drapery widths up to 100".

BATON

- Open and close panels by using hand-drawn baton.
- Baton will hang on the leading edge of the drapery.
- Baton length is predetermined based on the length of the drapery:

12"- 48" drapery will have a 36" baton.
48 1/4"- 64" drapery will have a 48" baton.
64 1/4"- 80" drapery will have a 60" baton.
80 1/4"- 180" drapery will have a 72" baton.

HARDWARE TYPE (WALL OR CEILING MOUNT)

WALL MOUNT

- Track can be mounted at any height along the wall.
- In rooms with high ceilings, mounting track lower on wall allows greater ease of opening and closing drapery.
- Hardware included.

CEILING MOUNT

- Track mounted to the ceiling.
- Ideal when there is little room between top of window or door and the ceiling.
- Extending drapery from floor to ceiling creates a seamless, dramatic effect.
- Hardware included.

INSTALLING RIPPLE FOLD CUSTOM TRACK & DRAPERY

How to Install the Custom Track System:

Carefully unpack all materials, making sure all components are included:

- Screws
- Track(s)
- Master carrier(s) and carriers (pre-installed within track)
- Mounting brackets
- Splice and hex key (only included with tracks over 8')

YOU WILL NEED:

- Drill with a 1/8" bit and a Phillips bit
- Phillips screwdriver
- Metal tape measure
- Hacksaw (optional)

INSTALLING WALL-MOUNT DRAPERY HARDWARE:

1. Determine the height of the top of track and mark bracket height on the wall for all brackets, adjusting as necessary to make sure they are all level.

CUSTOM DRAPERY + CUSTOM WINDOW HARDWARE PROGRAMS *(continued)*

2. Measure the width of the track and mark the 2 end-brackets approximately 3"-4" in from the ends of the track. Evenly space the remaining brackets and place corresponding marks. For heavy drapery, keep the brackets spaced tightly to prevent sagging.

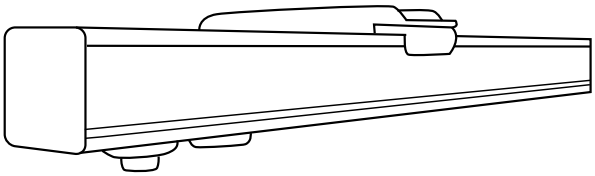

3. To attach the bracket to the wall, first pre-drill holes for screw diameter when mounting into wood frame of window or wall stud. Otherwise, pre-drill and install anchors first before fastening with screws.

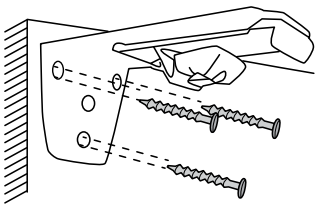

4. Place the track into the bracket as shown in the drawing; apply pressure until track "clicks" into bracket. Make sure track set screw is loose enough to allow the track retainer to flex. Repeat this step for the remaining brackets.

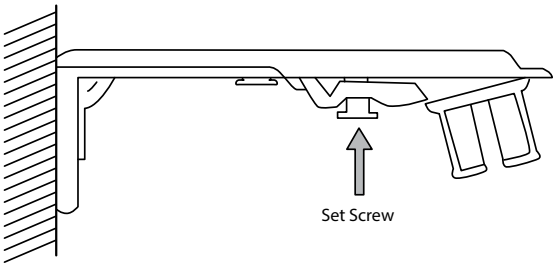

5. Tighten track set screws on all the brackets to secure track to brackets.

6. Adjust track to the desired projection. Projection is adjustable from 3"-4 1/2". Repeat this step for the remaining brackets.

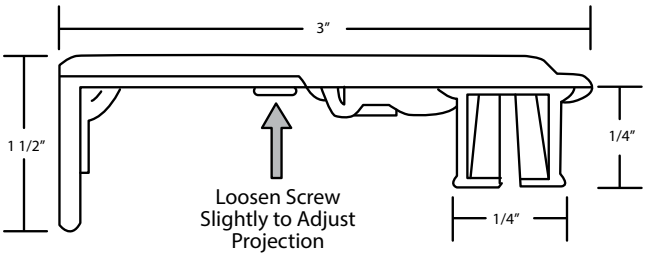

7. Once desired projection is set for all the brackets, lock the bracket into position by tightening the track depth adjustment set screw (see drawing below).

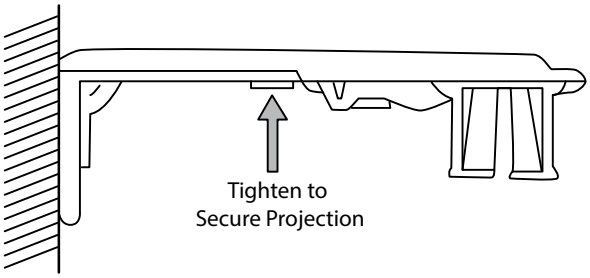

CUSTOM DRAPERY + CUSTOM WINDOW HARDWARE PROGRAMS *(continued)*

INSTALLING TRACK SYSTEMS OVER 8' WIDE WITH 2 TRACKS:

For wide areas, tracks will be shipped in multiple pieces and will require a splice.

- Slide the track of the connecting ends on each track into the channel of the splice and place ends together.
- Tighten locking screw with hex key for a secure fit.
- Secure with additional screw.

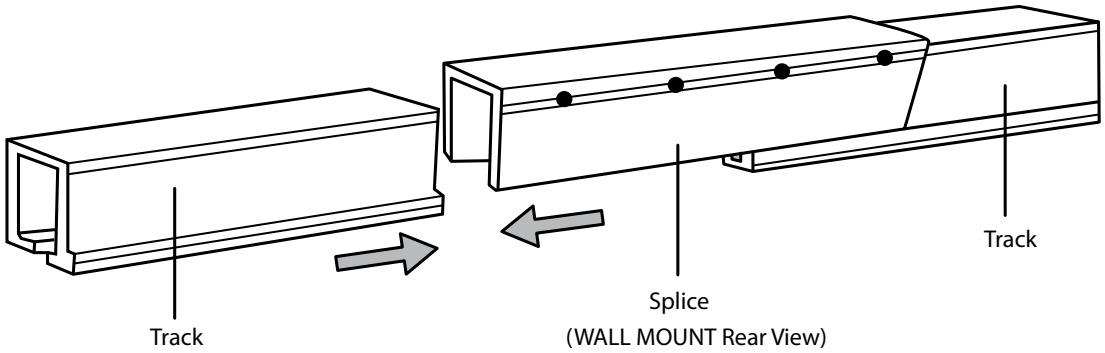

INSTALLING CEILING-MOUNT DRAPERY HARDWARE:

1. Measure the width of the track and mark the 2 end-brackets approximately 3"- 4" in from the ends of the track. Evenly space the remaining brackets and place corresponding marks.

2. To attach the bracket to the ceiling, first pre-drill holes for screw diameter when mounting into wood frame of window or stud. Otherwise, pre-drill and install anchors first before fastening with screws.

3. Place the track into the bracket, applying pressure until track "clicks" into bracket. Make sure track set screw is loose enough to allow the track retainer to flex. Repeat this step for remaining brackets.

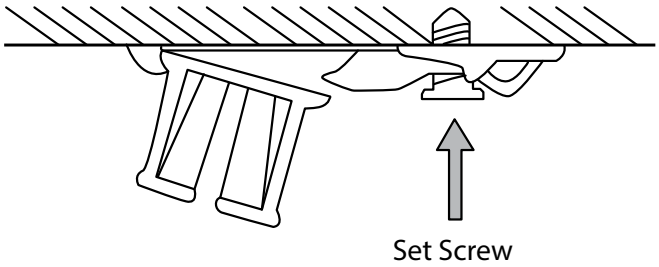

4. Tighten track set screws on all the brackets to secure track to brackets.

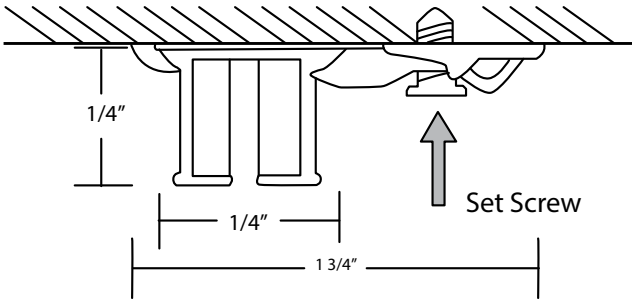

INSTALLING TRACK SYSTEMS OVER 8' WIDE WITH 2 TRACKS:

For wide areas, tracks will be shipped in multiple pieces and will require a splice.

- Slide the track of the connecting ends on each track into the channel of the splice and place ends together.
- The tracks will snap together. Press together and confirm tight fit.
- Secure with additional screw.

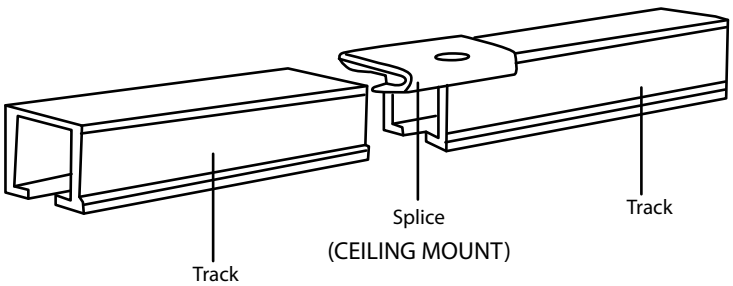

a

CUSTOM DRAPERY + CUSTOM WINDOW HARDWARE PROGRAMS *(continued)*

INSTALLING DRAPERY BATON (BATON CONTROL ONLY)

You may attach a baton(s) to the master carrier(s). Simply fit the metal hook on the baton through the slot on the master carrier.

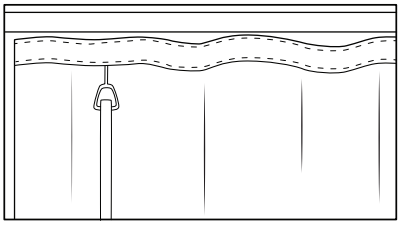

INSTALLING TENSION DEVICE (CORD CONTROL ONLY)

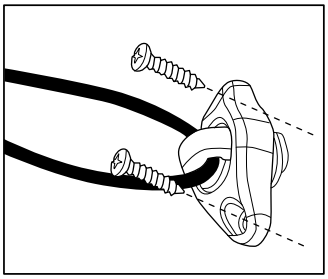

Consider Position of Tension Device: The tension device should be positioned on the window frame or the wall so that the tension device and control cord do not interfere with operation/hanging of drapery. Install tension device so that the cord is taut, without stretching or pulling down on it. Stretching the cord will cause excessive wear. Do not twist or cross the control cord.

Install Tension Device: Press and hold the back spring on the tension device that is pre-installed at the top of the cord loop. With the spring held, slide the device down to the bottom of the loop to position the device as you like. Insert and secure the 2 screws through the holes in the device. The loop should now pass freely through the tension device.

Please Note: When attaching to wood, included screws can be screwed directly into wood. When attaching to drywall and metal, use appropriate anchors, which can be found at any hardware store.

RIPPLE FOLD DRAPERY INSTALLATION

Carefully unpack your drapery and determine the left panel, center panel and right panel by looking at the top of the drapery and referring to the following:

Left Panel:

Will have 2 additional snaps on the right side/leading edge of the panel with no pendants pre-snapped on – the 2 snaps are to be snapped to the master carrier of the track.

Center Panel:

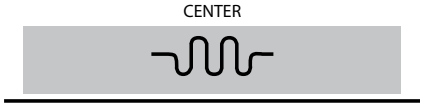

Will have 2 additional snaps on both the left and right side of the panel with no pendants pre-snapped to them – these snaps are to be snapped to the master carriers on the track.

Right Panel:

Will have 2 additional snaps on the left side/leading edge of the panel with no pendants pre-snapped on – the 2 snaps are to be snapped to the master carrier of the track.

CUSTOM DRAPERY + CUSTOM WINDOW HARDWARE PROGRAMS *(continued)*

ATTACHING RIPPLE FOLD DRAPERY

* Note: Drapery track/rail first must be installed (off wall or ceiling) prior to hanging drapery. Please see "How to Install the Custom Track System."

1. Start by snapping off the first 2 buttons on the leading edge of the drapery to the master carrier.

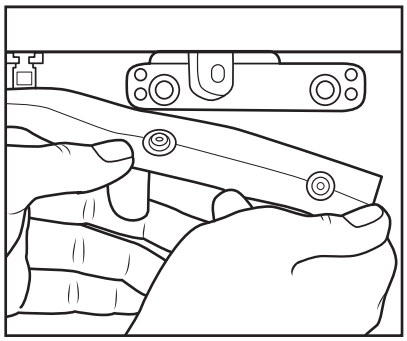

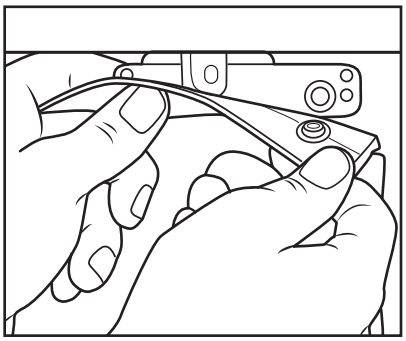

2. Begin inserting the pendants that have been pre-snapped to the top of the drapery into the carriers. The carriers are pre-strung inside the track and have a slot in them in which the "pendants" will fit.

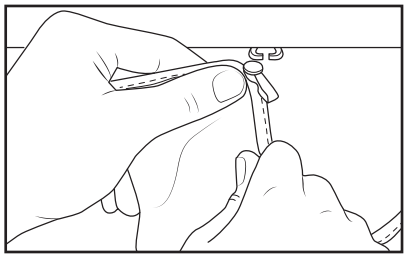

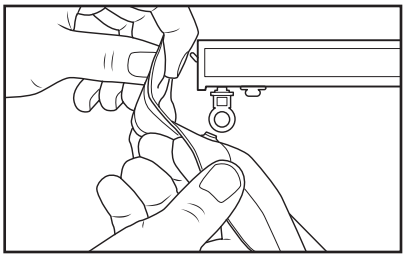

3. The last snap should be inserted into the stationary carrier in the end-cap.*

*Does not apply to center panels.

4. Once you have inserted all of your pendants on the drapery into the carriers on the track, you should begin to create "S"-like folds throughout the drapery. Start at the master carrier and begin by pushing the fabric that follows it toward the back of the track. These should be the first 2 carriers that follow after the master carrier. Bring the fabric between the next 2 carriers toward the front of the track – the next 2 carriers, push back the fabric, and repeat so that you create "S"-like folds throughout as shown. Front to back, the "S" takes up approximately 4".

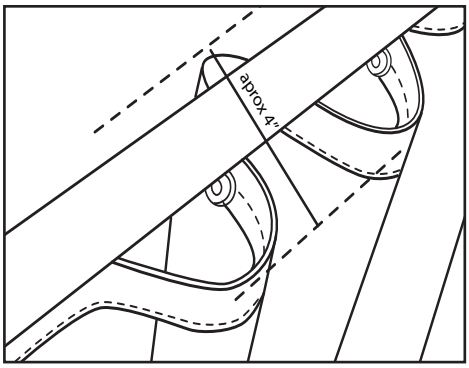

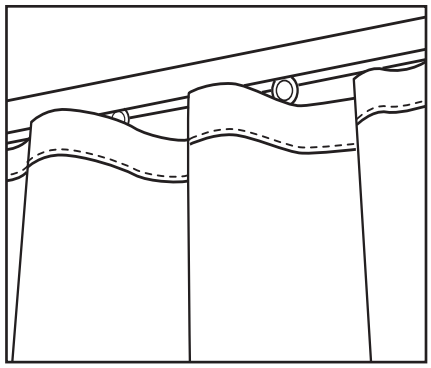

5. Installing returns on the ends of your drapery allows the last fold of the drapery panel to "return" back to the wall. This is ideal, especially in areas where you can see your drapery from the side.
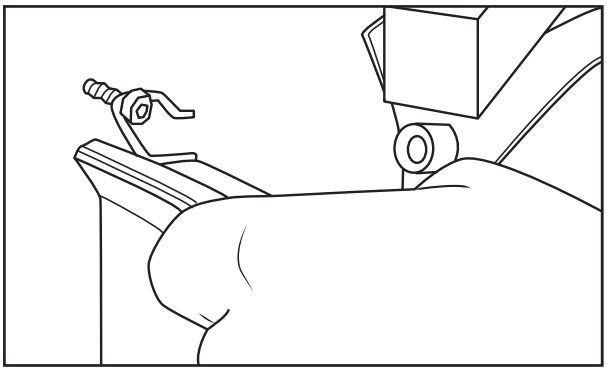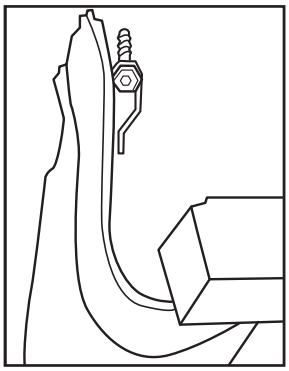
Take the last 4" of fabric at the top of the drapery next to the last snap, and simply return the fabric back toward the wall. You may affix the return to the wall by hooking a drapery pin to the backside of the panel, and then placing a screw in the wall at the same height. Then attach the pin to the screw. This will keep the return in place.